County O (Moorland Road)

Proposed Detour Plan

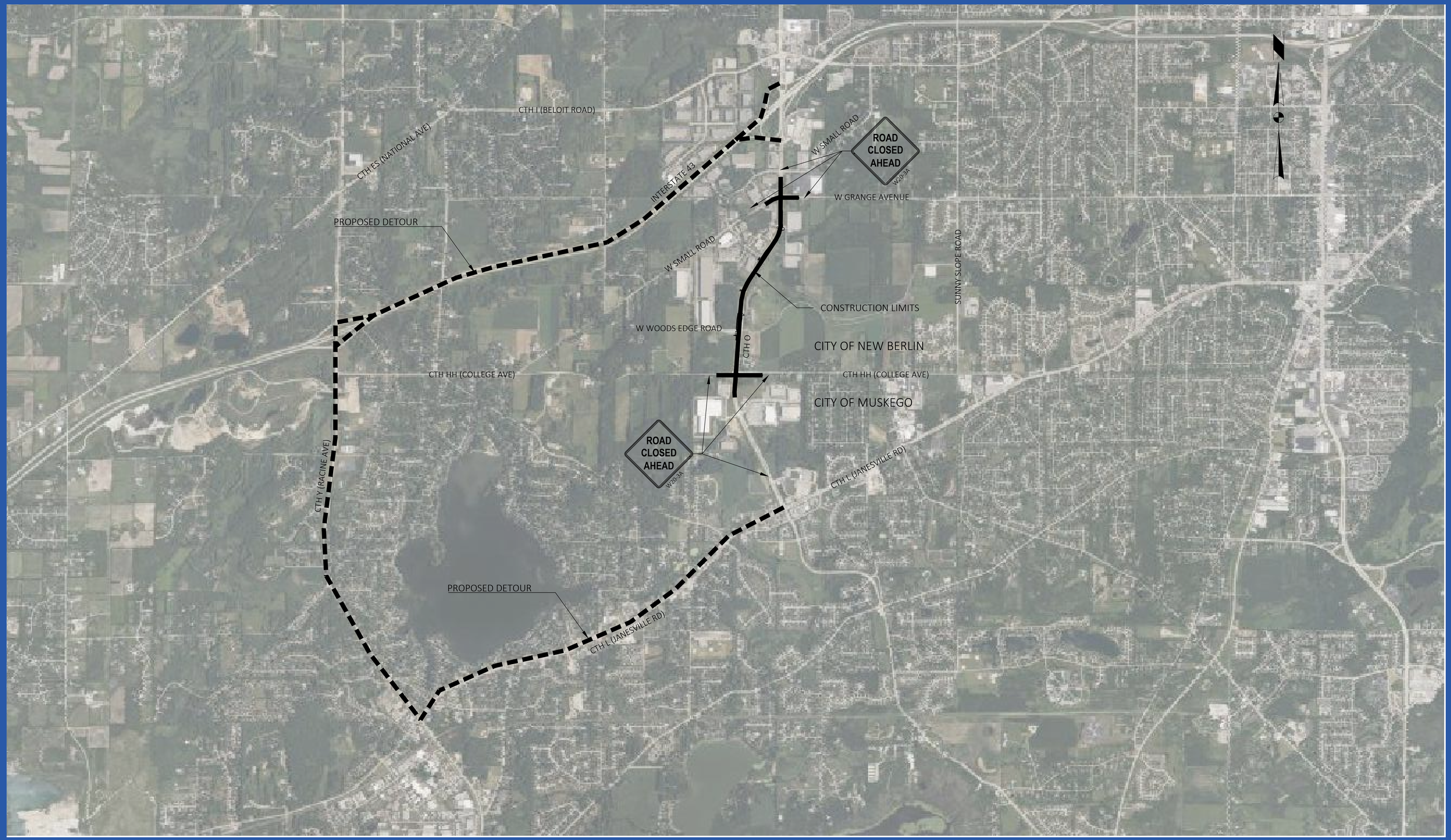

Waukesha County

February 2024

County O (Moorland Road)

Typical Sections

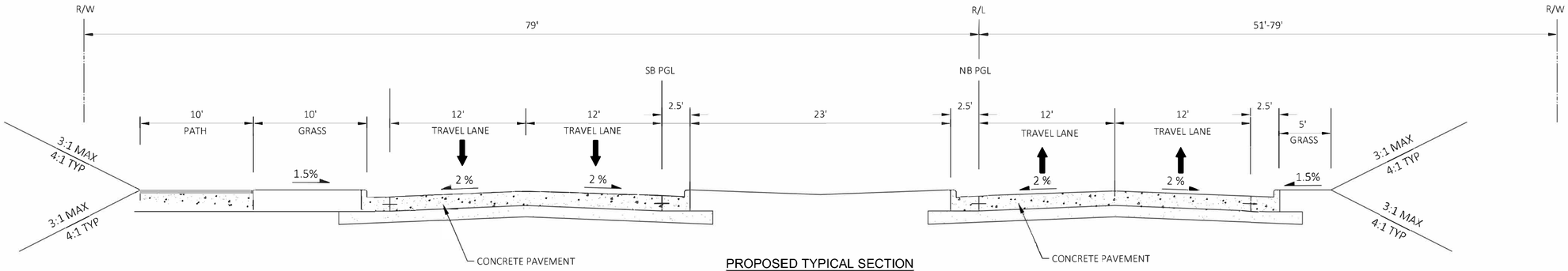

PROPOSED TYPICAL SECTION
MOORLAND ROAD (CTH O)
STA 165+00 TO STA 175+92
V = 40 MPH

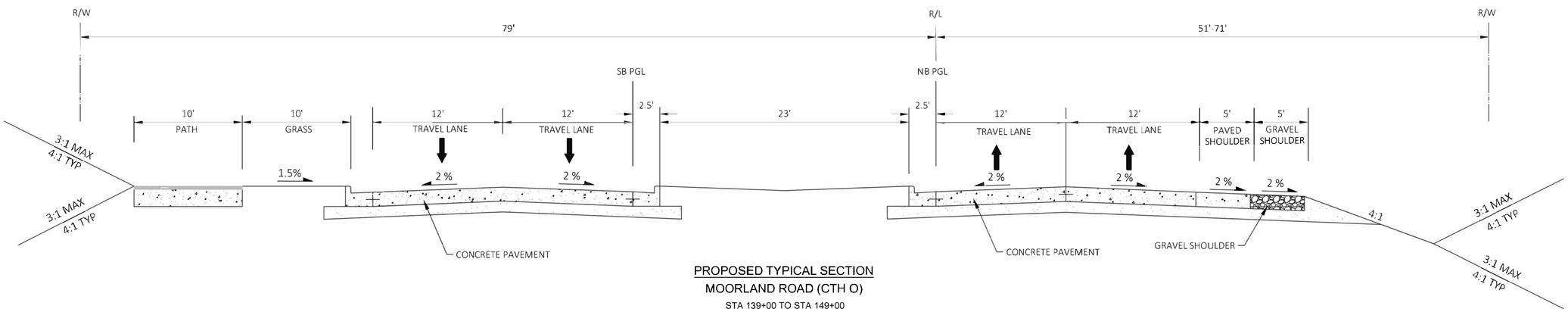

PROPOSED TYPICAL SECTION
MOORLAND ROAD (CTH O)
STA 139+00 TO STA 149+00
V = 50 MPH
STA 149+00 TO STA 165+00
V = 40 MPH

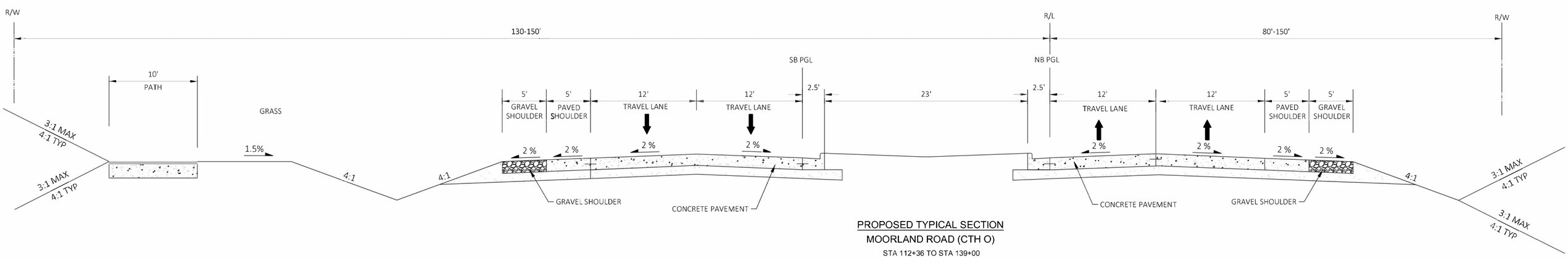

PROPOSED TYPICAL SECTION
MOORLAND ROAD (CTH O)
STA 112+36 TO STA 139+00
V = 50 MPH

Paul Farrow
County Executive

Allison Bussler
Director

Waukesha County

Department of Public Works

Contact: Ed Hinrichs
ehinrichs@waukeshacounty.gov
262-548-7740

FOR IMMEDIATE RELEASE
Date: Monday, February 26, 2024

RECONSTRUCTION PROJECT
MOORLAND ROAD (CTH O) CTH HH (COLLEGE AVE) TO GRANGE

Public Involvement Meeting February 29th at New Berlin City Hall Council Chambers

(WAUKESHA, WI) – The Waukesha County Department of Public Works along with their engineering consultant RA Smith, will host a public involvement meeting for a project to reconstruct and add additional lanes along Moorland Road (CTH O) in the City of New Berlin. The meeting will be held on **Thursday, February 29, 2024 from 4:30 p.m. to 6:30 p.m.** at the New Berlin City Hall Council Chambers, 3805 S Casper Dr, New Berlin, WI 53151.

The meeting will be an open house format with no formal presentation. Exhibits will be on display and will be available. Anyone with interest in this project is encouraged to stop between 4:30 p.m. and 6:30 p.m. Representatives from Waukesha County, RA Smith, and WisDOT will be available to discuss the project and answer questions. Exhibits illustrating the proposed improvements and construction impacts may be reviewed at the following website starting March 4, 2024:

https://www.waukeshacounty.gov/DPW/ENG/moorland-rd-cth-o---hh/

The New Berlin City Hall is ADA accessible.

For more information, please contact Mr. Ed Hinrichs, Waukesha County Project Manager at (262) 548-7740.

About the Waukesha County Department of Public Works
The Waukesha County Department of Public Works is committed to providing the foundations of success for the citizens and businesses of Waukesha County by constructing and maintaining quality transportation and building infrastructure. Get info on projects, plans, and more at www.WaukeshaCounty.gov/DPW.

Follow Waukesha County DPW on Twitter at www.twitter.com/WaukeshaCoDPW.

###

Department of Public Works
515 W. Moreland Blvd., Room AC220
262-548-7740

CTH O (MOORLAND ROAD) COLLEGE AVE. - GRANGE AVE. CITY OF NEW BERLIN

PUBLIC INVOLVEMENT MEETING - FEBRUARY 29, 2024